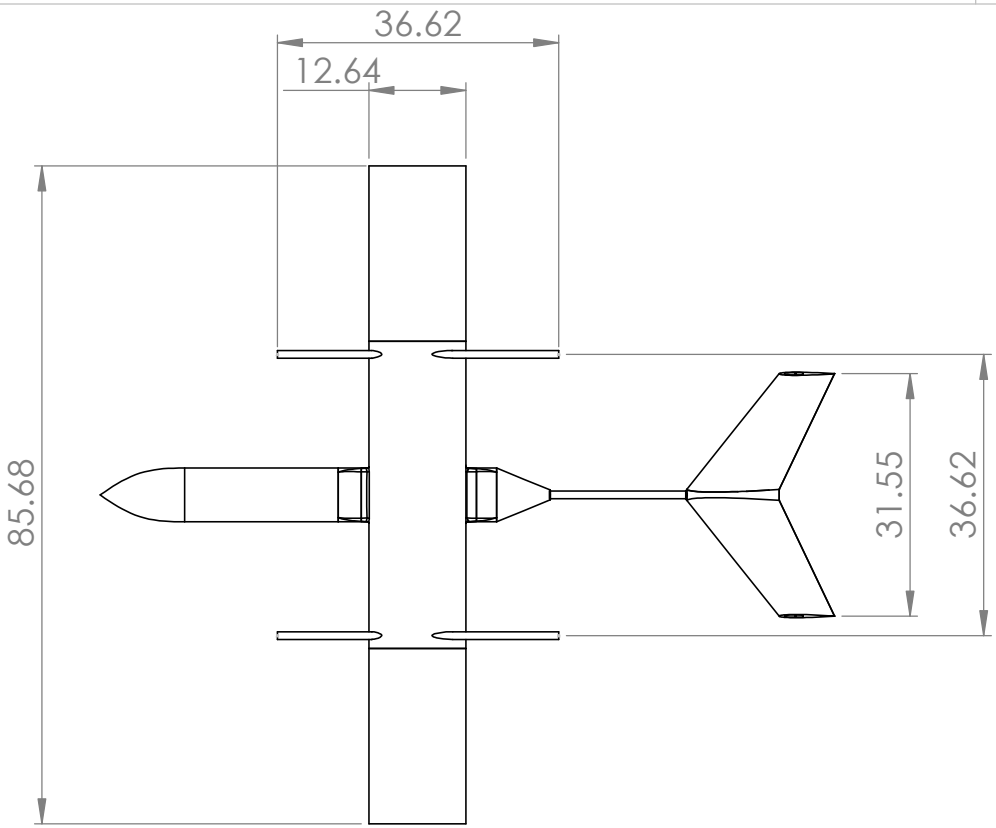

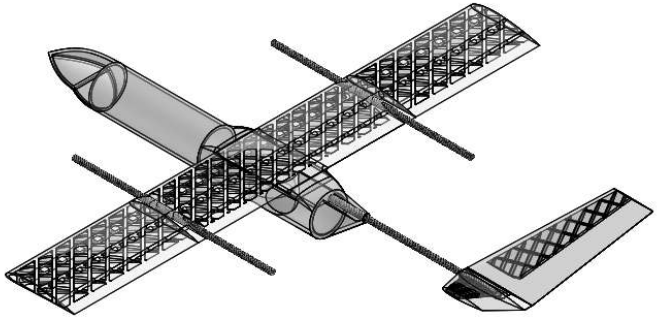

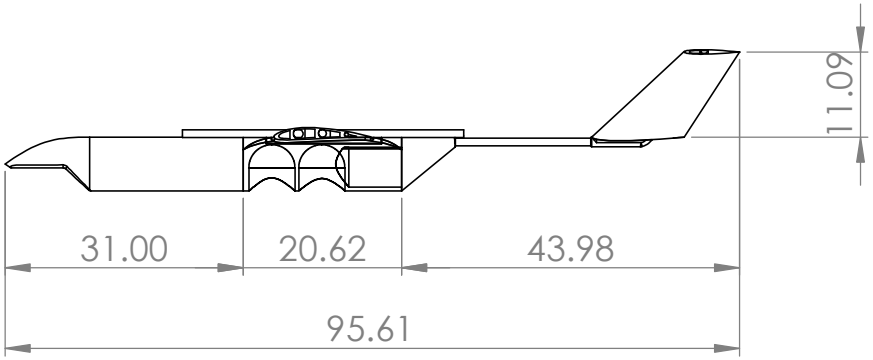

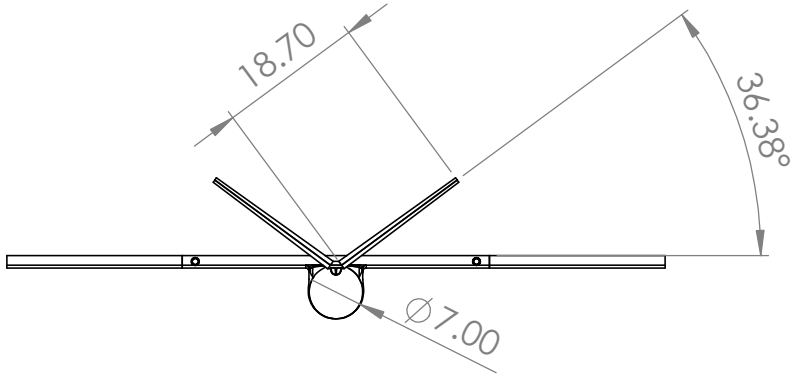

JAGER-V4
DWG NO: SD-001
REV: A
SCALE: 1:25
UNITS: INCHES
DRAWN BY: J. SIGAFOOS
DATE: 27 FEB 2026
SHEET 1 OF 4

UNIVERSITY OF CALIFORNIA, SAN DIEGO
MAE 155A – SENIOR DESIGN
TEAM 1

SOLIDWORKS Educational Product. For Instructional Use Only.

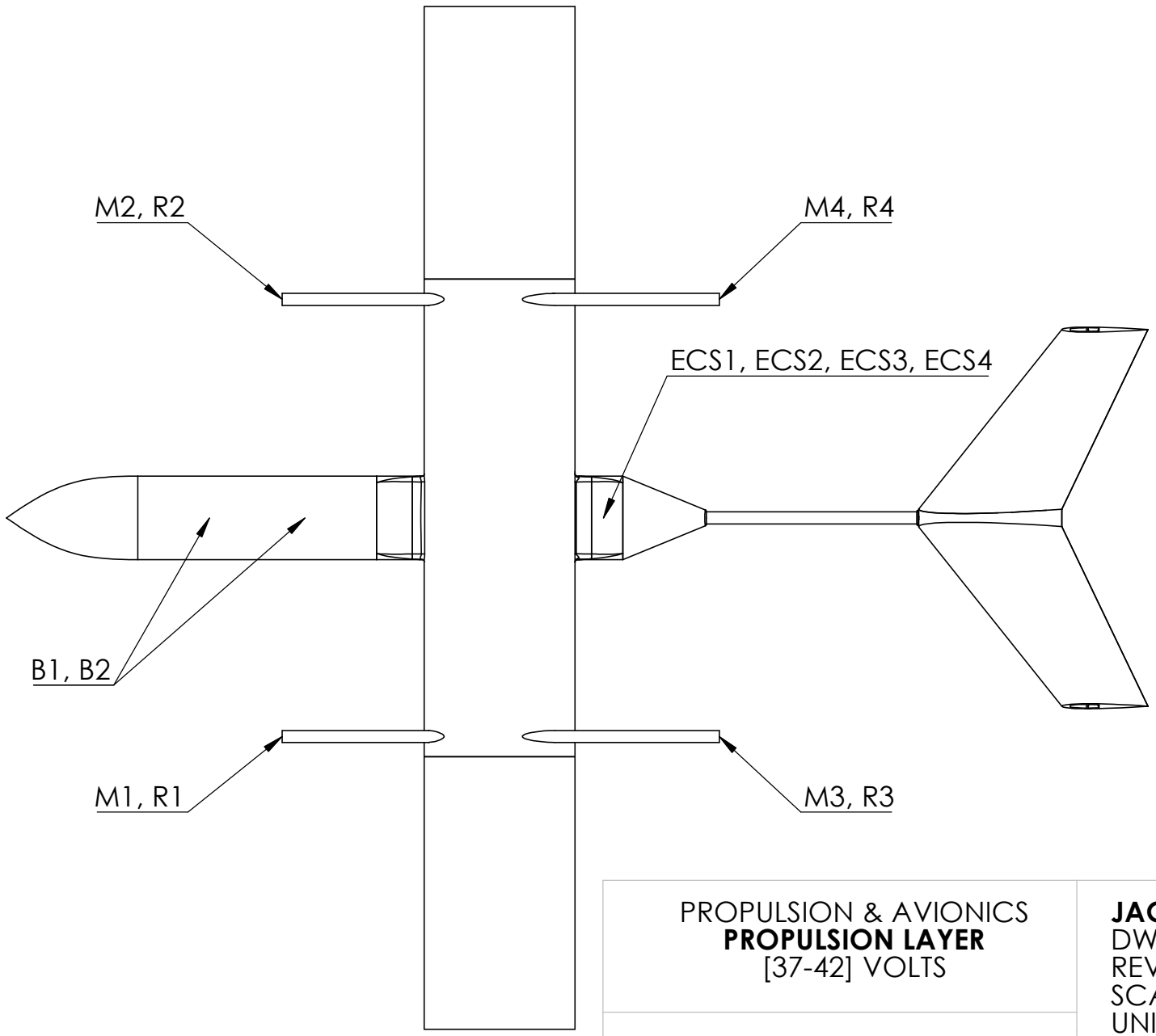

PROPULSION & AVIONICS
PROPULSION LAYER
[37-42] VOLTS

UNIVERSITY OF CALIFORNIA, SAN DIEGO
MAE 155A – SENIOR DESIGN
TEAM 1

JAGER-V4
DWG NO: SD-001
REV: A
SCALE: 1:15
UNITS: INCHES
DRAWN BY: J. SIGAFOOS
DATE: 27 FEB 2026
SHEET 2 OF 4

SOLIDWORKS Educational Product. For Instructional Use Only.

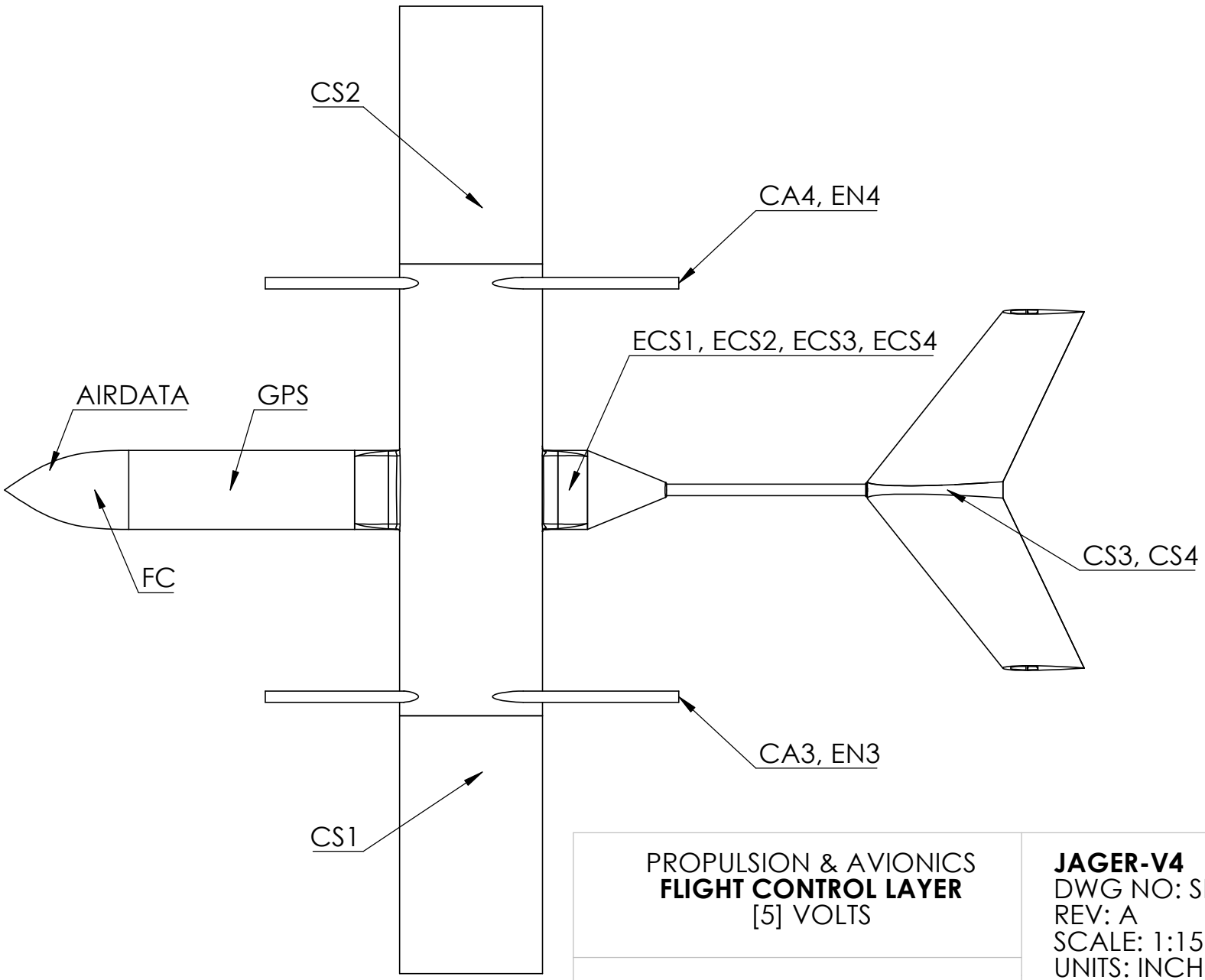

PROPULSION & AVIONICS
FLIGHT CONTROL LAYER
[5] VOLTS

UNIVERSITY OF CALIFORNIA, SAN DIEGO
MAE 155A – SENIOR DESIGN
TEAM 1

JAGER-V4
DWG NO: SD-001
REV: A
SCALE: 1:15
UNITS: INCHES
DRAWN BY: J. SIGAFOOS
DATE: 27 FEB 2026
SHEET 3 OF 4

SOLIDWORKS Educational Product. For Instructional Use Only.

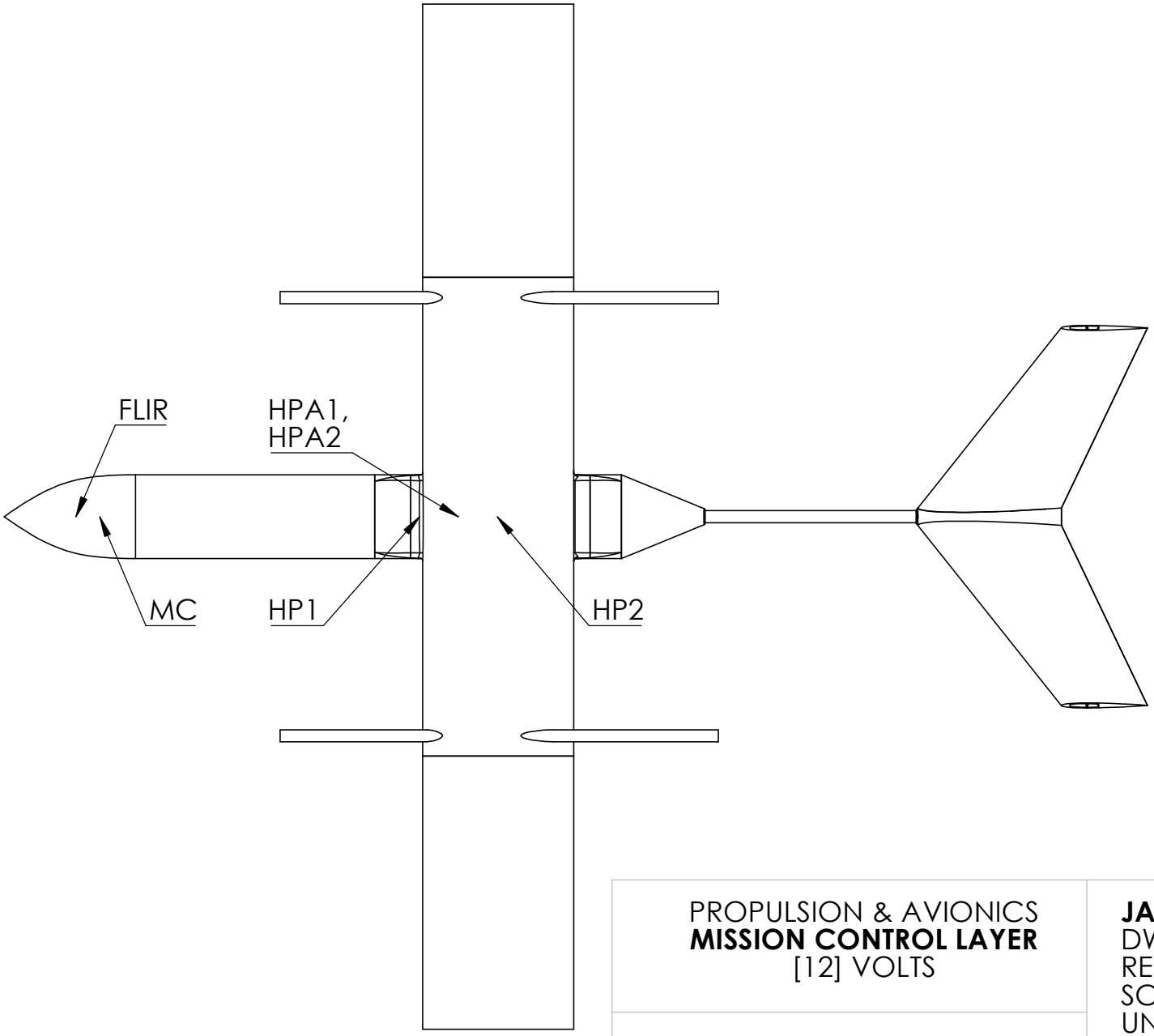

PROPULSION & AVIONICS
MISSION CONTROL LAYER
[12] VOLTS

UNIVERSITY OF CALIFORNIA, SAN DIEGO
MAE 155A – SENIOR DESIGN
TEAM 1

JAGER-V4
DWG NO: SD-001
REV: A
SCALE: 1:15
UNITS: INCHES
DRAWN BY: J. SIGAFOOS
DATE: 27 FEB 2026
SHEET 4 OF 4

SOLIDWORKS Educational Product. For Instructional Use Only.